Mouse-15

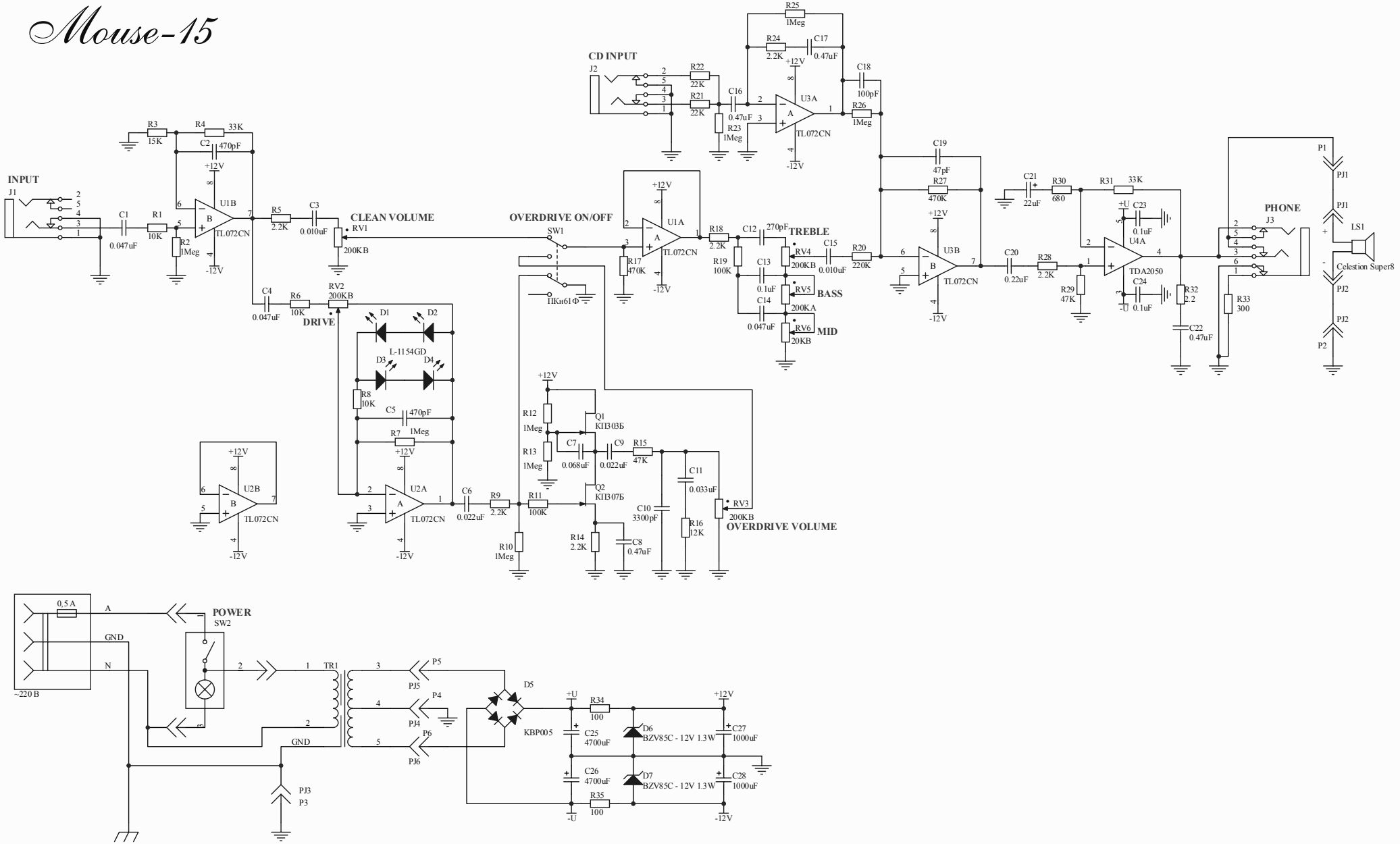

Title		
Size A3	Number R1.15.00.00.000.Э3	Revision
Date: 07.12.2004	Sheet of	
File: D:\ДОКУМЕНТЫ\..\Mouse-15.SCHDOC	Drawn By:	